MINMILE
Smart Technology

- Used in chemical, oil refining, oil exploitation, offshore oil platforms, oil tankers, military and other hazardous areas;
- Suitable for control of high-power electric heaters in hazardous areas and some equipment that requires on-site touch adjustment display;
- Different installation methods are optional, such as hanging, floor-standing, piano table type.



Model Identification

MAMP □ – □

□:
06：pz
07： pz(环境监控系统，带空调)
08： px/pz
06：pz
07：pz
(Environmental monitoring system with air conditioning)
08：px/pz

□:
安装方式
h=挂式
v=落地式
p=琴台式
Mounting type
h:Hanging
v:Free standing
p:Piano table type



General Technical Parameters

Explosion protection Gas explosion protection Dust explosion protection	06：Ex db eb ib mb pzc IIC T4 Gc 07：Ex db eb pzc IIC T4 Gc/Ex pzc tb IIIC T135℃ Dc 08: Ex db eb pxb IIC T4 Gb/Ex db eb pzc IIC T4 Gb Ex pxb tb IIIC T135℃ Db/Ex pzc tb IIIC T135℃ Db
Conformity to standards	GB/T 3836.1-2021, GB/T 3836.2-2021, GB/T 3836.3-2021, GB/T 3836.5-2021, GB/T 3836.31-2021, GB/T 3836.4-2021 IEC60079-0:2017，IEC60079-1:2014，IEC60079-2:2014，IEC60079-7:2017，IEC60079-31:2022，IEC60079-11：2023
Air pressure	0.2~0.8 Mpa
Work pressure	200-600Pa
Gas type	Inert gas, clean compressed air, nitrogen
Intake mode	Compensation type, ventilation type
Box structure type	Hanging type, floor type (left and right, up and down, integrated structure), piano table type
Ambient Temp. IP and Anti-corrosion rate	-40℃~+60℃、IP54/IP66、WF2
Protective enclosure material	Q235/SS304/SS316
The material of Exposed fastener	SS304/SS316 stainless steel
Electrical parameter	Maximum rated voltage 1500V, maximum rated current 1500A,50/60Hz

Product working principle

▲ By installing all the electrical components of the user in a main cavity filled with positive pressure clean medium, the air pressure in the main cavity is higher than the external air pressure, so as to effectively isolate the ignition source and the explosive gas mixture, thereby achieving explosion-proof purpose.

MINMILE
Smart Technology

▲ There are two intake types: positive pressure compensation type and positive pressure ventilation type.

Compensation type: intermittent gas supply, positive pressure chamber sealing is very good, gas consumption is also very small, generally used to configure non-explosion-proof touch screens that need to be touched;

Ventilation type: continuous gas supply is required, which can take away the heat generated by the components installed in the positive pressure chamber at any time. The heat dissipation performance is good, and it is suitable for components with large heat generation inside, such as: high-power inverter, thyristor, high current circuit breaker , contactors, etc.;



▲ According to the degree of transition of the dangerous area of the outer casing, it is generally divided into 2 categories.

1. Lower the explosion-proof hazardous Zone 1 to a non-hazardous zone for the positive pressure housing;

2. Lower the explosion-proof hazardous Zone 2 to the non-hazardous zone for the positive pressure housing;



Technical Requirements

▲ Press the positive pressure start button. When the pressure in the positive pressure chamber is greater than 60Pa, power supplied automatically to the positive pressure chamber. Positive pressure chamber enters the normal working stage. It should be re-purged during the purge. In the normal working stage, if the pressure is less than 60Pa, the user should provide0.2-0.8Mpa dry air.

Principle of air path control for positive pressure system

■ Positive pressure control cabinet

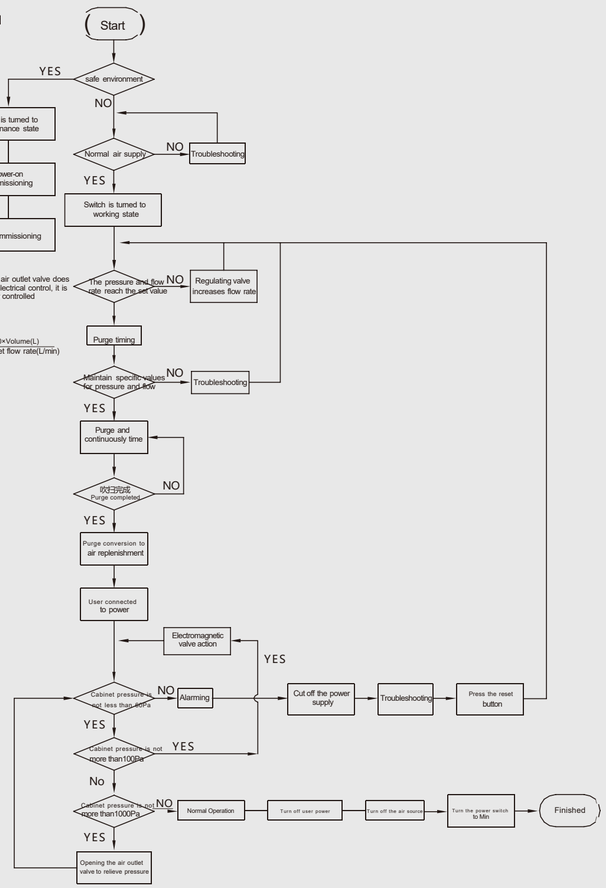

MINMILE
Smart Technology

Principle of air path control for positive pressure system

Positive pressure control cabinet

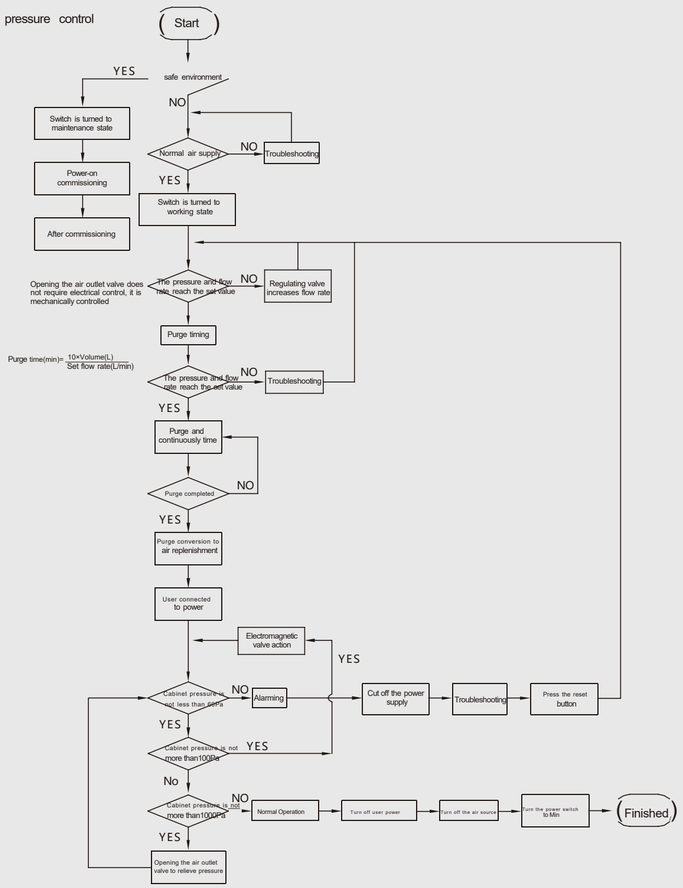

Product appearance and installation schematic

Cabinet dimension	Positive pressure control cabinet	Cabinet Px
400x400x300	Ex db eb ib mb pzc IIC T4 Gc	
400x600x300		
600x600x350	Ex db eb ib mb pzc IIC T4 Gc Ex db eb pzc IIC T4 Gb Ex pzc tb IIIC T135℃ Db	Ex db eb pxb IIC T4 Gb Ex pxb tb IIIC T135℃ Db
600x800x350		
800x1000x350		
800x1200x400		
800x1200x600		
800x1600x600		
800x2000x600		
1000x1800x600		
1000x2000x600		
1200x2000x600		
1000x2000x800		
1200x2000x800		
1400x2000x800		
1400x2200x800		

Cabinet dimension

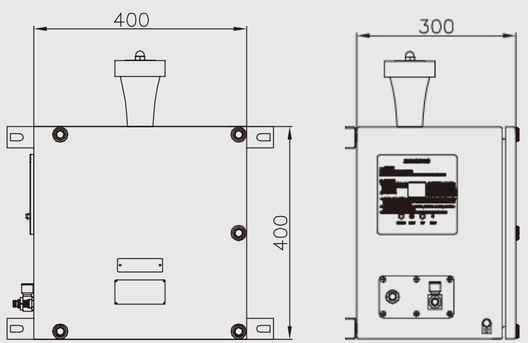

Positive pressure control cabinet

MINMILE
Smart Technology

Product appearance and installation schematic

Positive Pressure Cabinet PX

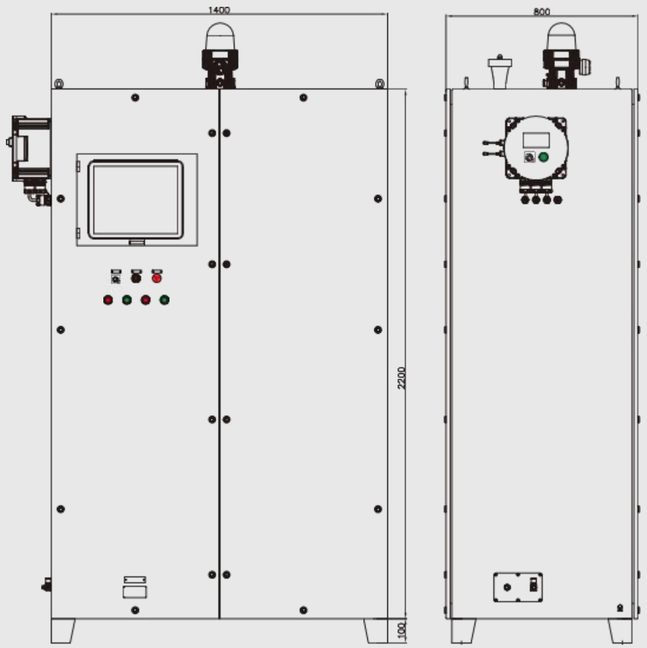





- Modular cable/pipe penetration seals can be configured to replace explosion-proof inlet and outlet cable gland.





- Case cooler





- Using the principle of hot air at the top of the cabinet so we put the exhaust valve on the top, the pressure in the cabinet exceeds 1000pa, the valve automatically opens to dissipate heat.





- Air conditioning cooling